tcc\a20_4

dis. 2708/2 AS

TCC 20/4 – LT. 2000

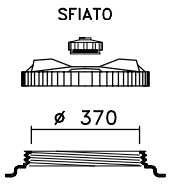

CPF 410

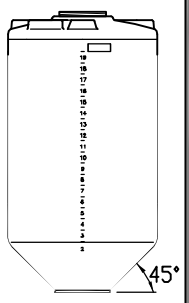

OTRE

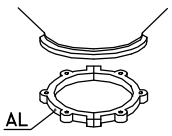

CS 4

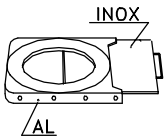

GH 4

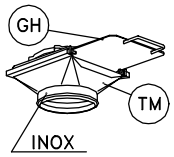

TM 4

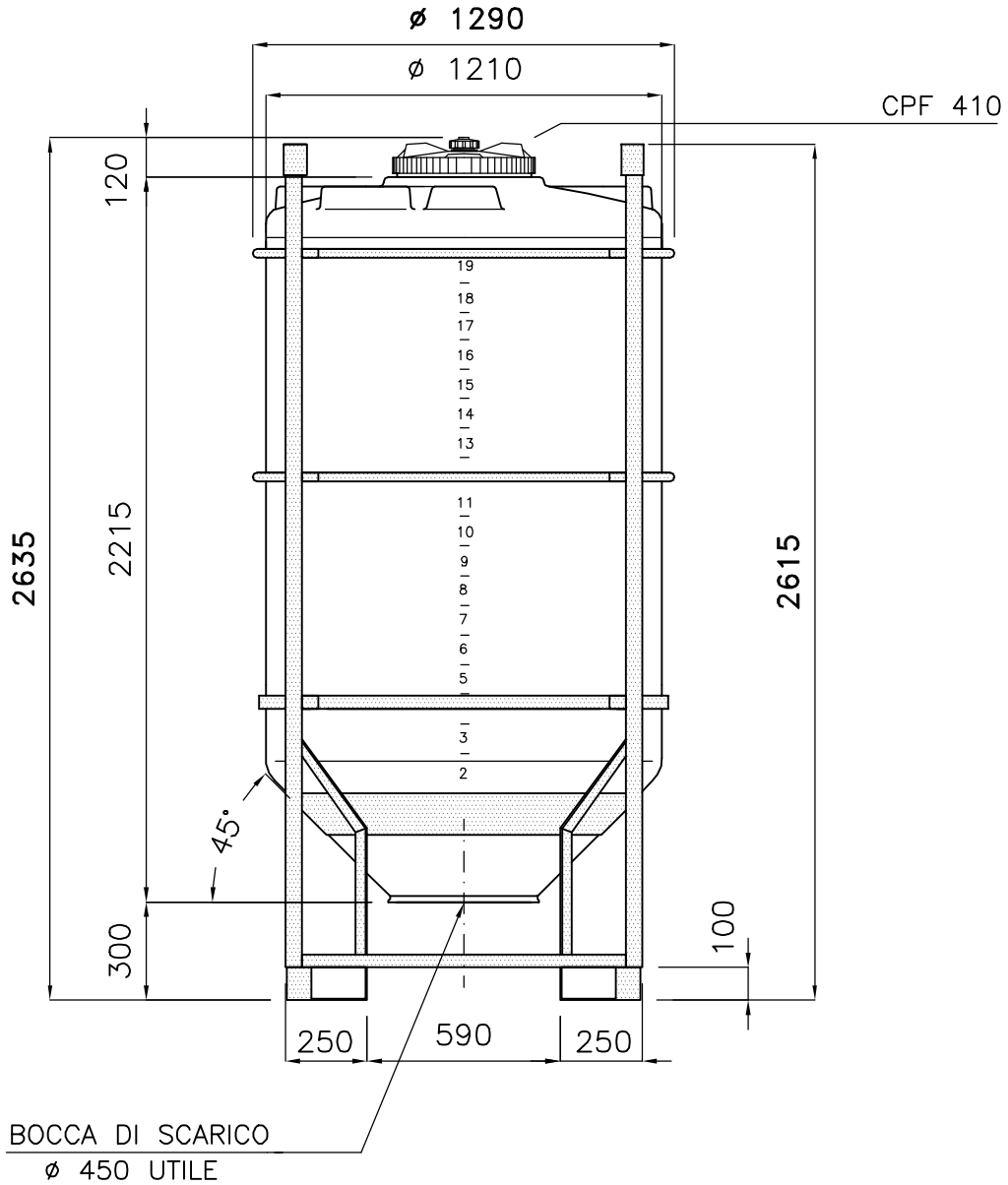

Piano Superiore per
coperchio laterale ø 200

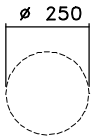

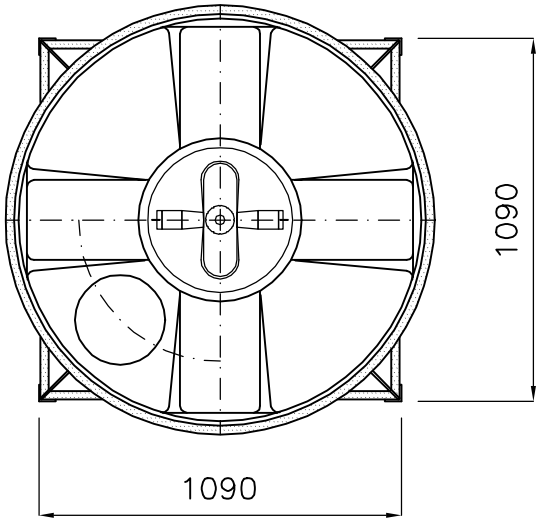

T/131.1864

/2: S.L. – 12.06.02 – PIANO SUPERIORE A DX; SF1 SU CPF 410

Tel. 035/844060 ASTRO Fax 035/844646