tca\a-19_2

dis. 2704/02 AS

TCA 19/2 ST – LT. 1900

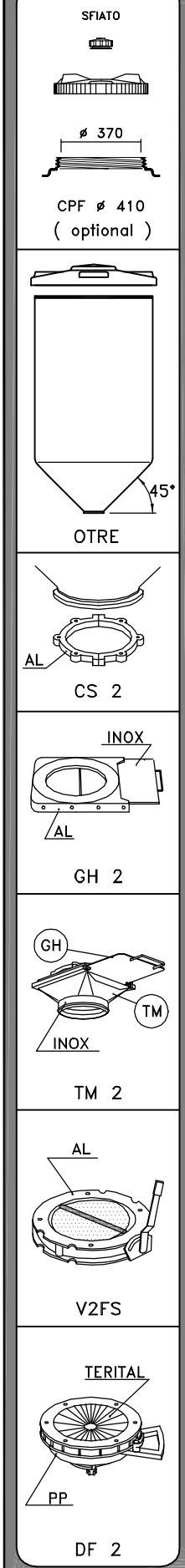

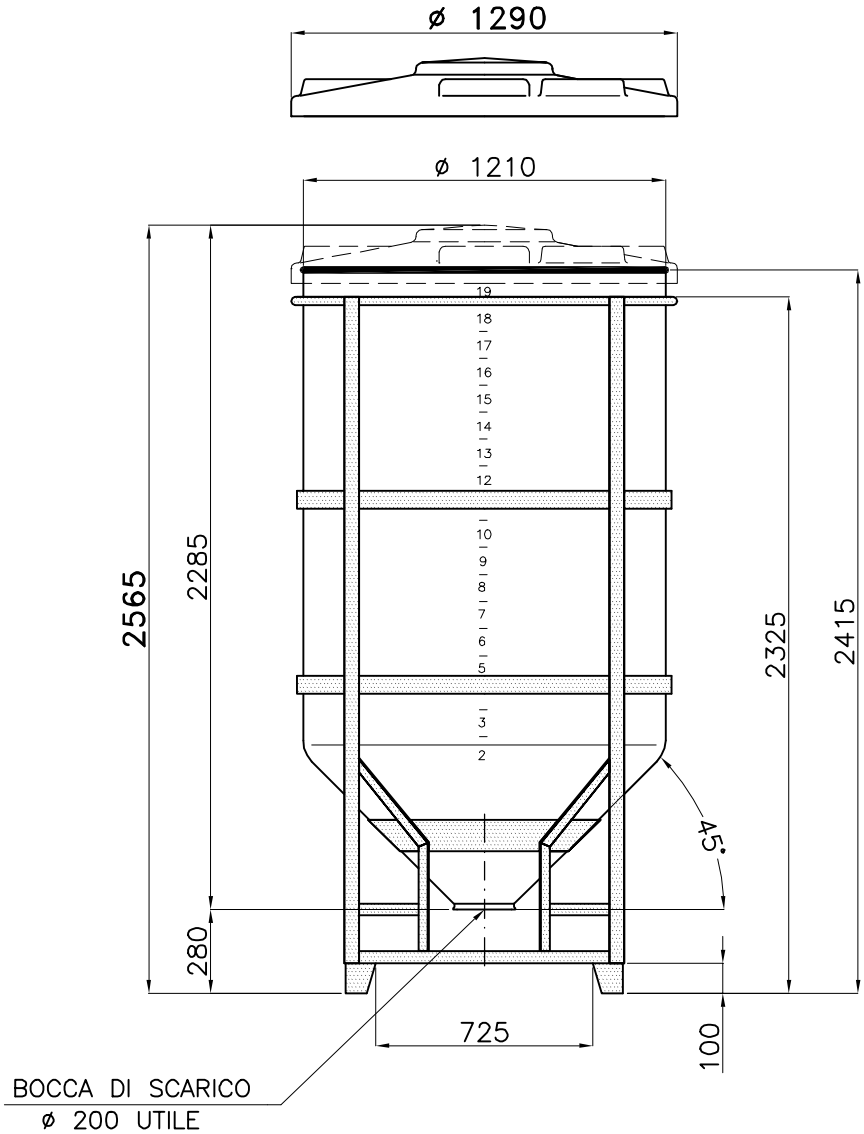

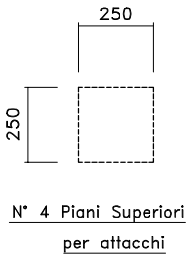

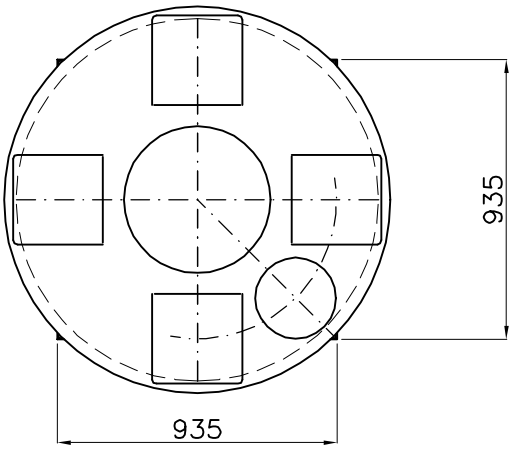

02: SL – 10.07.09 – ANELLO TELAIO in TUBO

Tel. 035/844060 ASTRO Fax 035/844646