G.M. tco\a25_2st

dis. 2699 AS

TCO 25/2 – LT. 2.450

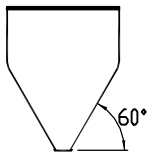

OTRE PE

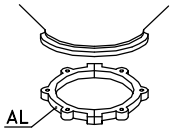

CS 2

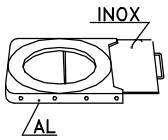

GH 2

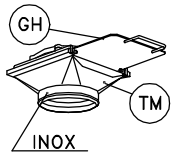

TM 2

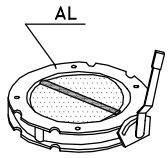

V2FS

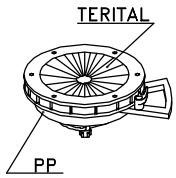

DF 2

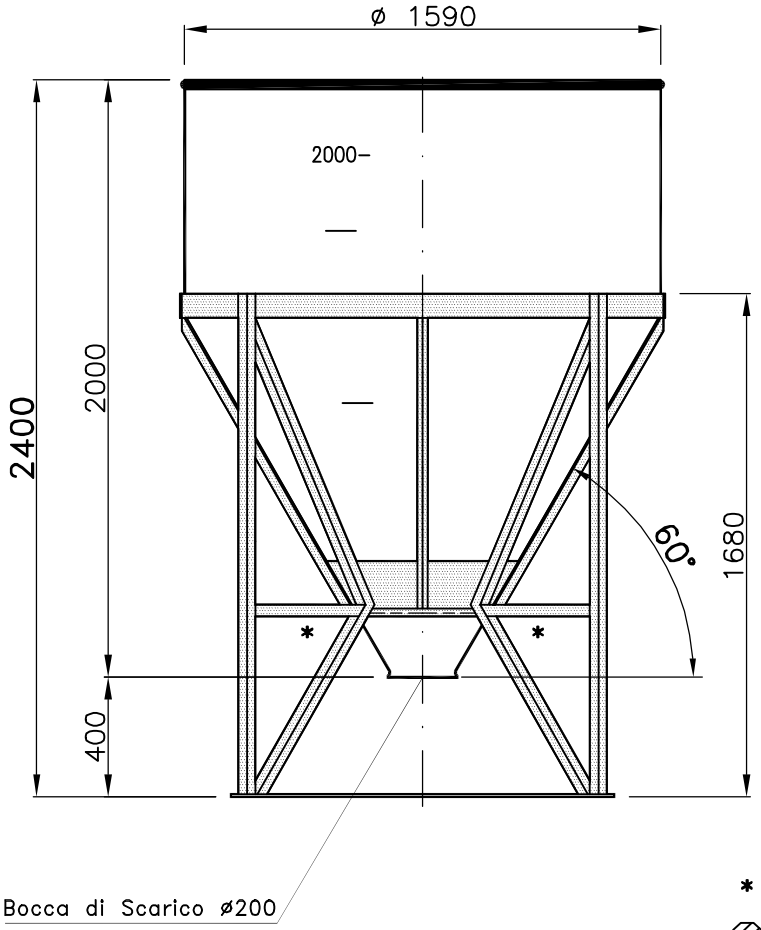

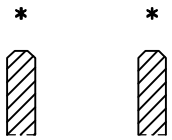

Inforcamento a vuoto

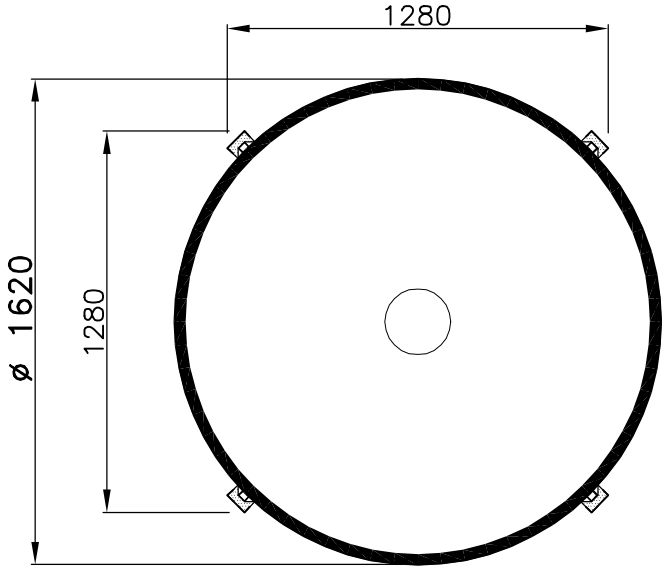

Tel. 035/844060 ASTRO Fax 035/844646