tso\19_2st

TSO 19/2 – LT. 1.900

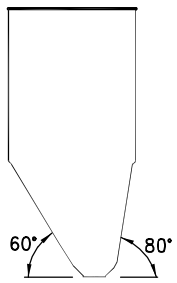

OTRE

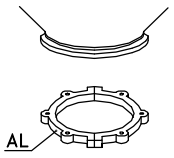

CS 2

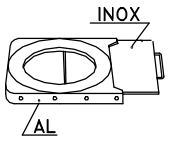

GH 2

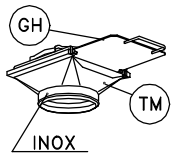

TM 2

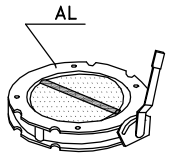

V2FS

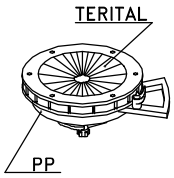

DF 2

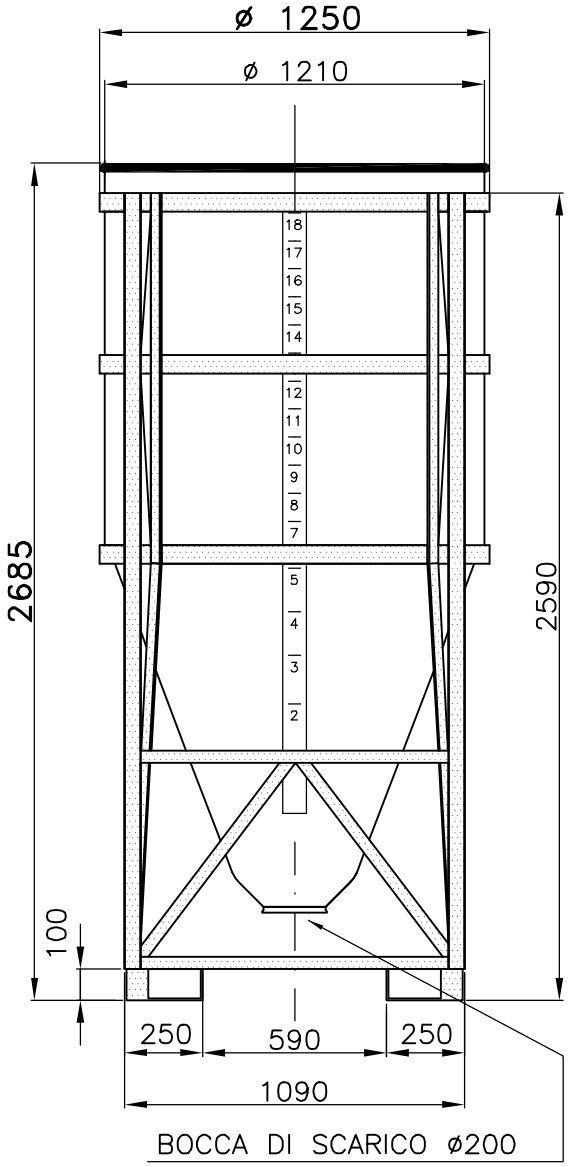

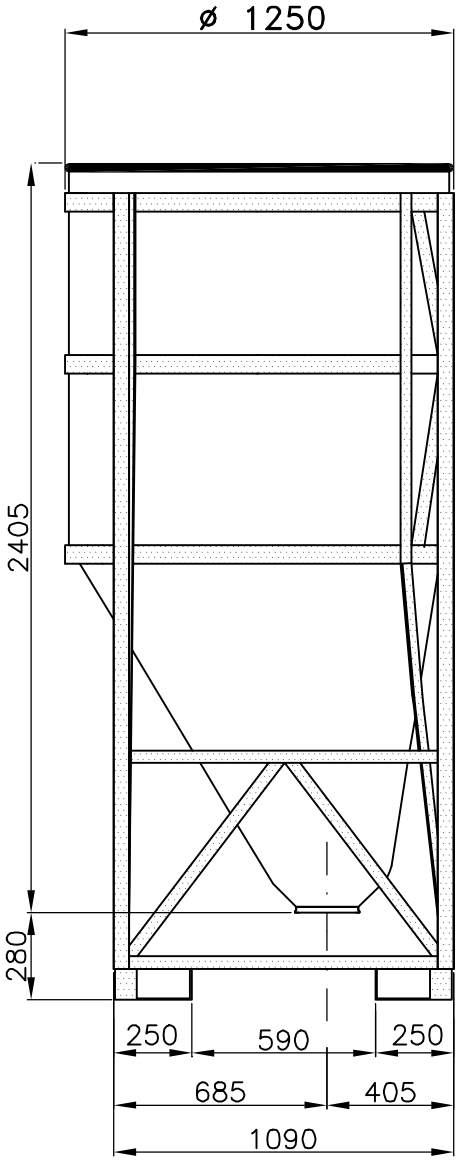

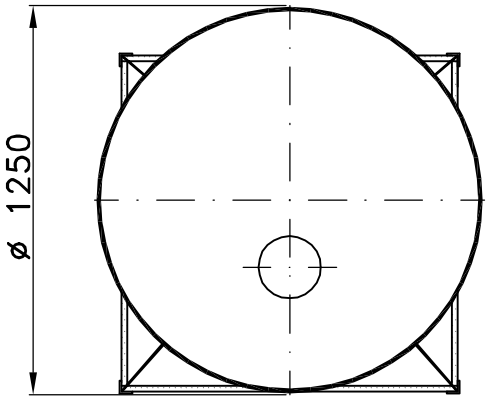

T/157.1892

dis. 2663

Tel. 035/844060 ASTRO Fax 035/844646