TCA\12_3

dis. 2626/02 AS

TCA 12/3 – LT. 1200

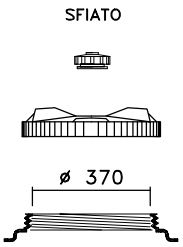

CPF 410
(optional)

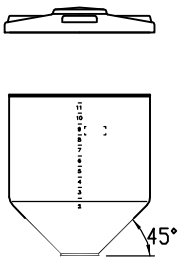

OTRE

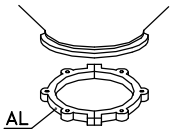

CS 3

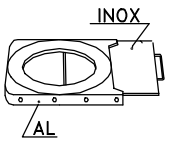

GH 3

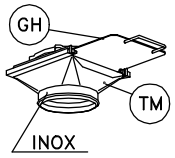

TM 3

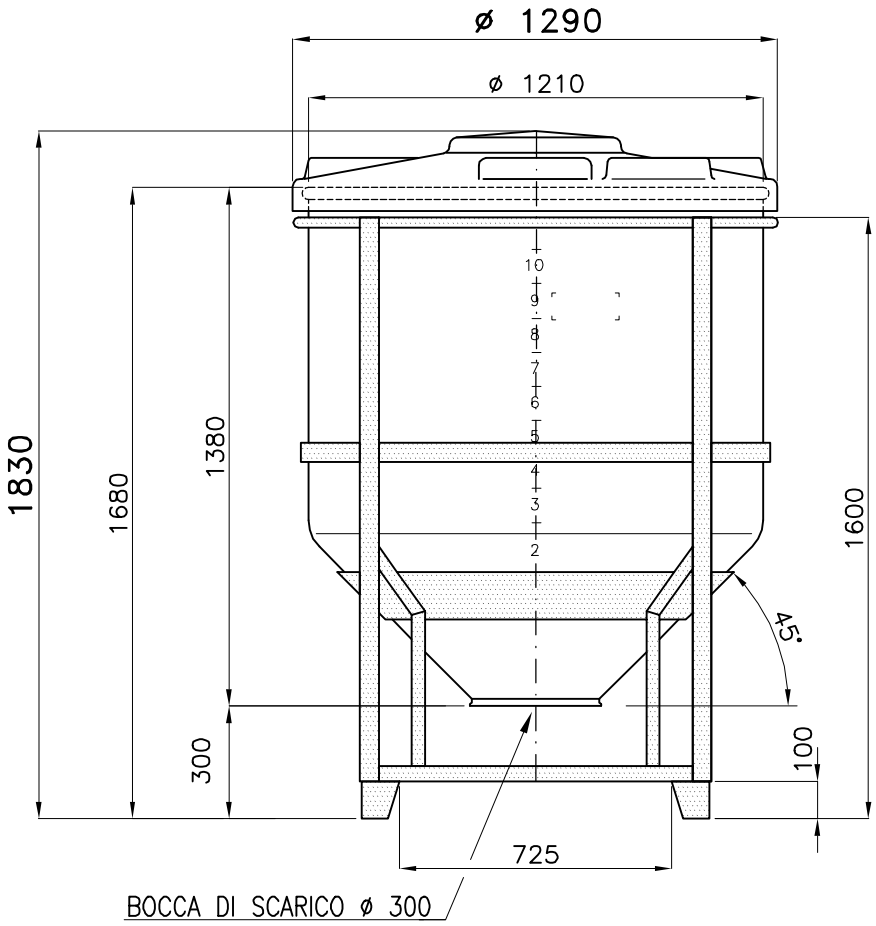

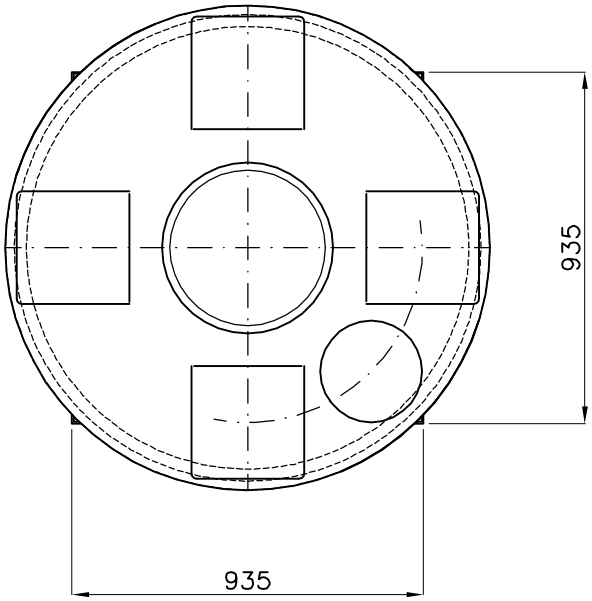

02: SL – 09.07.09 – ANELLO IN TUBO; SCALA 1:1

Tel. 035/844060 ASTRO Fax 035/844646