tca\12_2

dis. 2554/02 AS

TCA 12/2 ST – LT. 1200

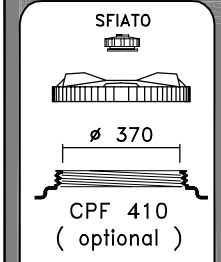

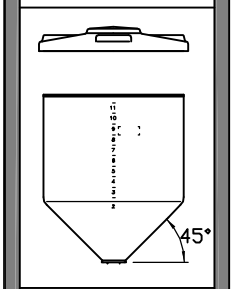

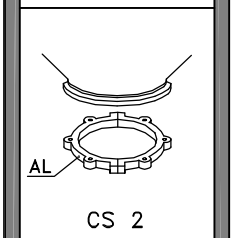

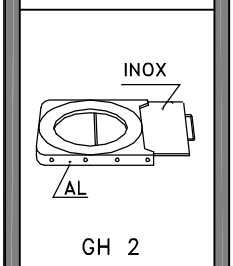

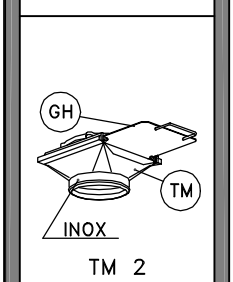

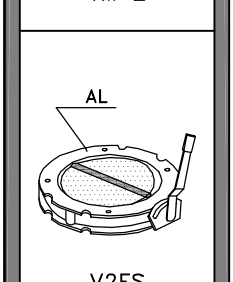

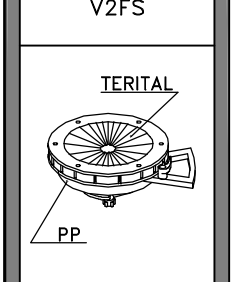

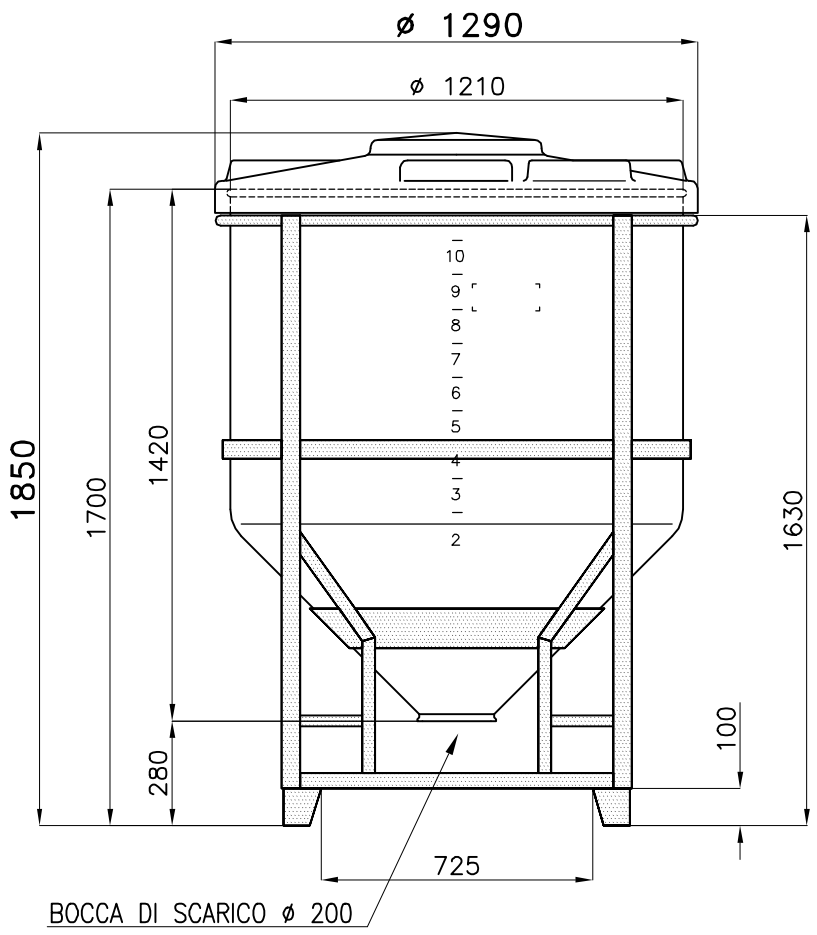

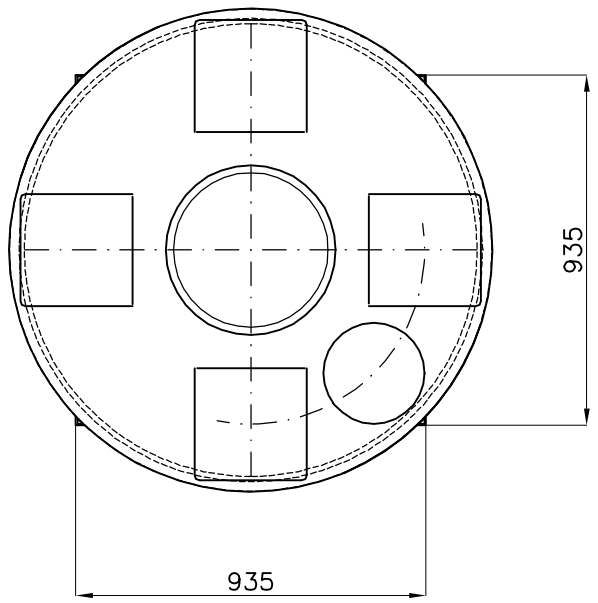

02: S.L. – 09.06.09 – H.TOTALE; SCALA 1:1

Tel. 035/844060 ASTRO Fax 035/844646