tco\12_2

dis. 2552/02 AS

TCO 12/2 ST – LT. 1200

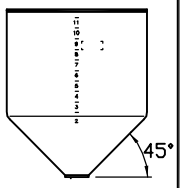

OTRE

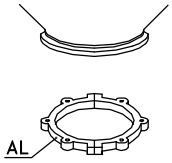

CS 2

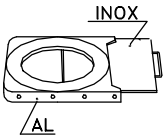

GH 2

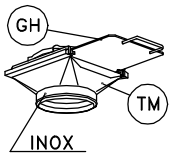

TM 2

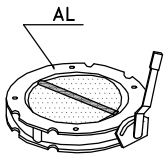

V2FS

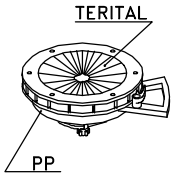

DF 2

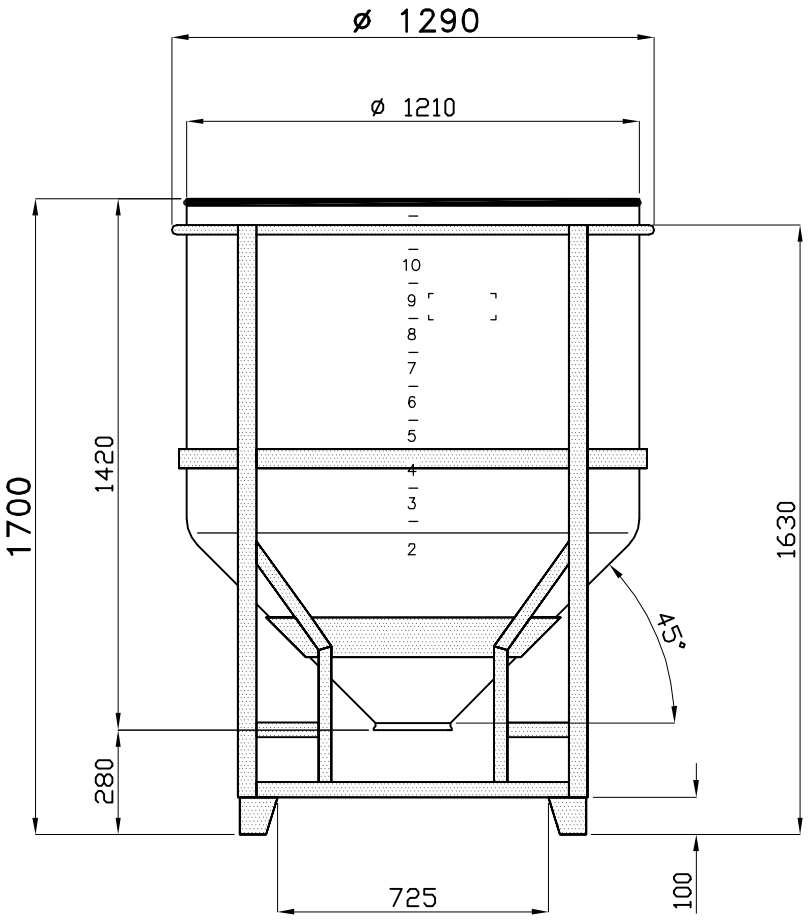

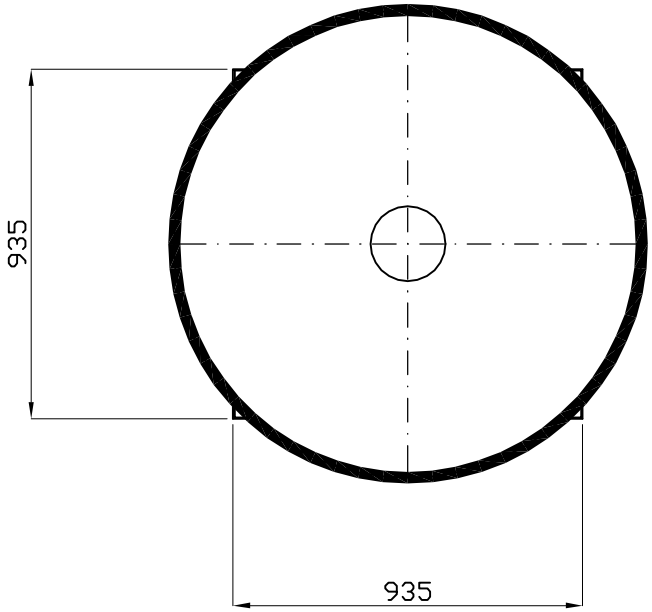

02: S.L. – 10.06.09 – H.TOTALE; SCALA 1:1

Tel. 035/844060 ASTRO Fax 035/844646