tsa\12_4st

dis. 2324/01 AS

TSA 12/4 – LT. 1200

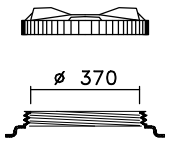

CPF ø 410
(optional)

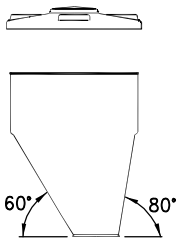

OTRE

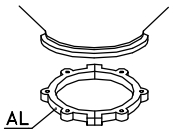

CS 4

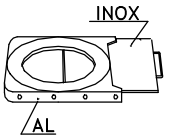

GH 4

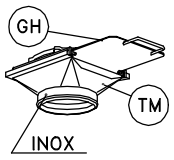

TM 4

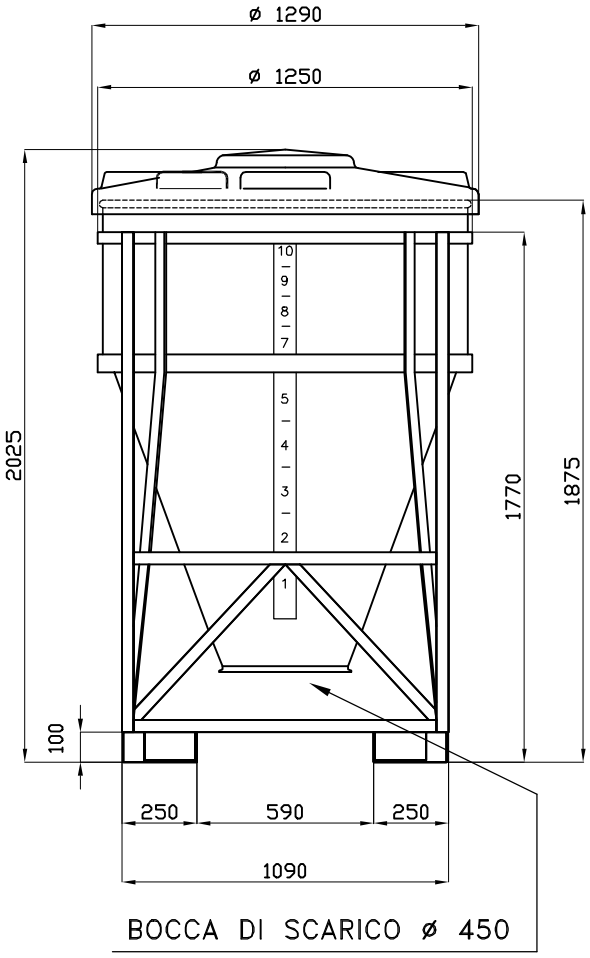

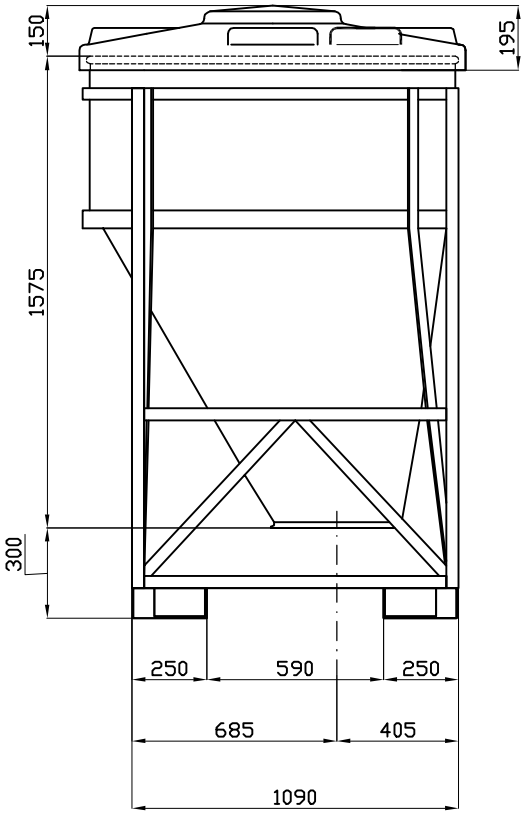

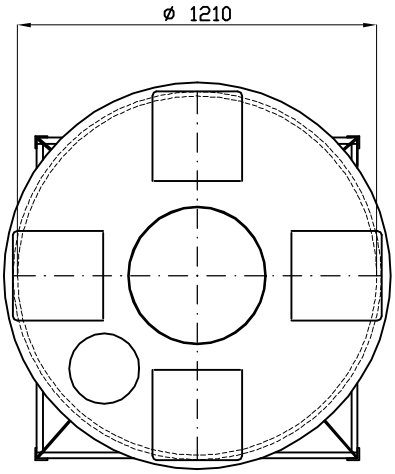

/01: SL – 10.09.08 – PIANETTO

Tel. 035/844060 ASTRO Fax 035/844646