tcc\polveri\a88-p

dis. 2306/02 AS

TCC 88/P – LT. 8.900

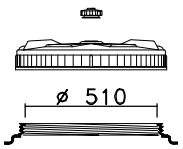

CPF 570

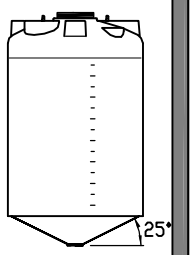

OTRE

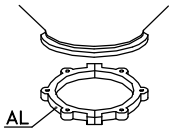

CS 2

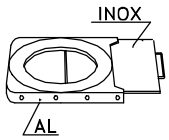

GH 2

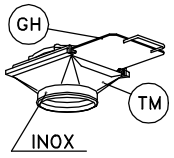

TM 2

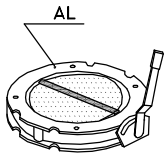

V2FS

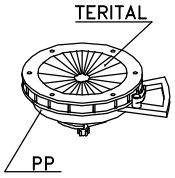

DF 2

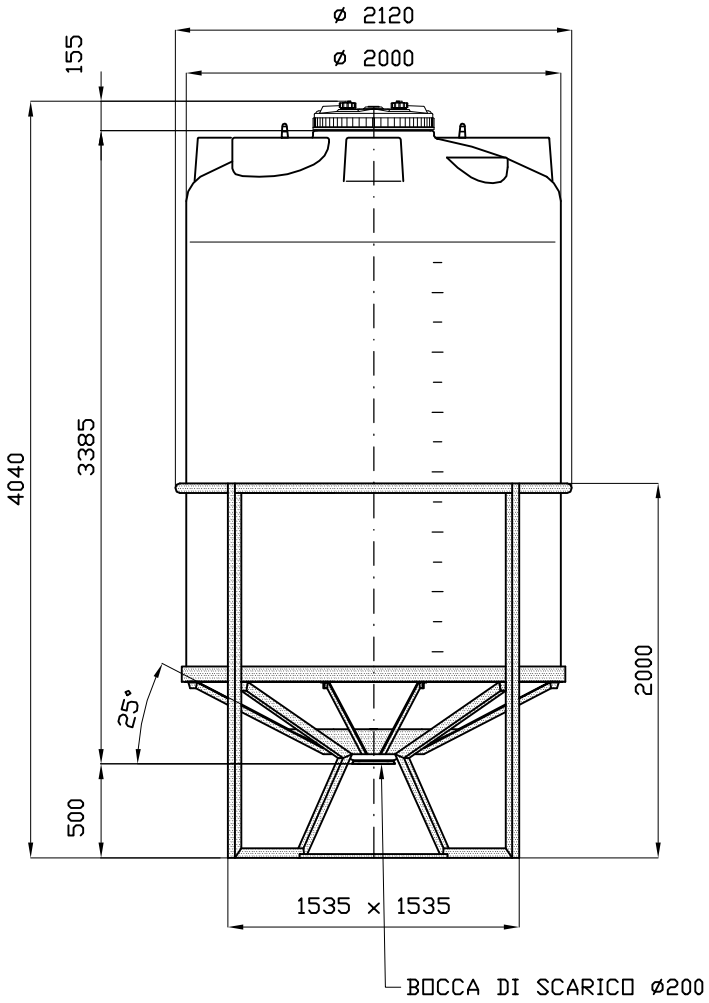

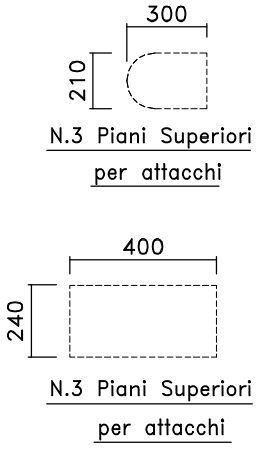

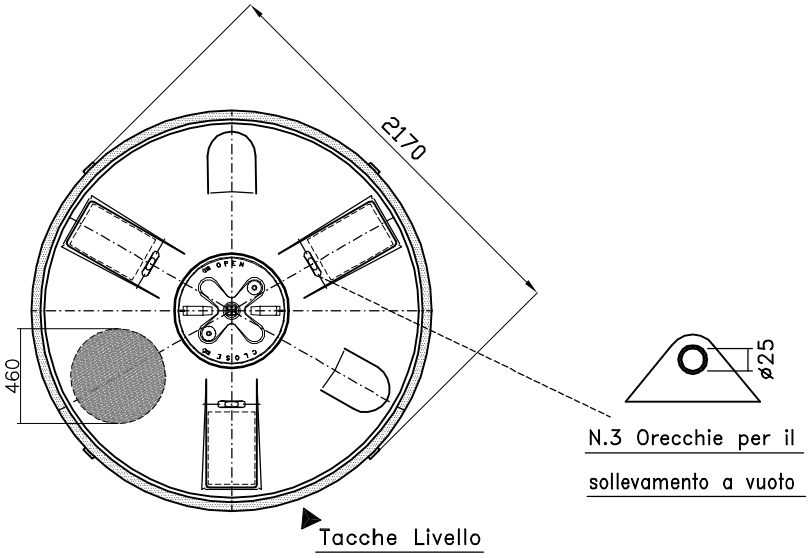

/02: SL – 24.06.09 – ORIENTAMENTO TACCHE

Tel. 035/844060 ASTRO Fax 035/844646