tcc\a30_4

dis. 2302/1 AS

TCC 30/4 – LT. 2950

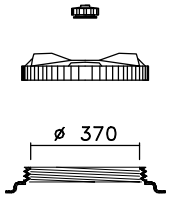

CPF 410

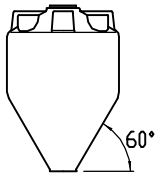

OTRE PE

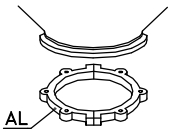

CS 4

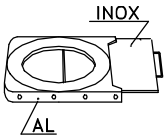

GH 4

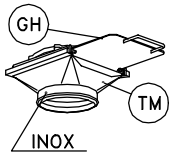

TM 4

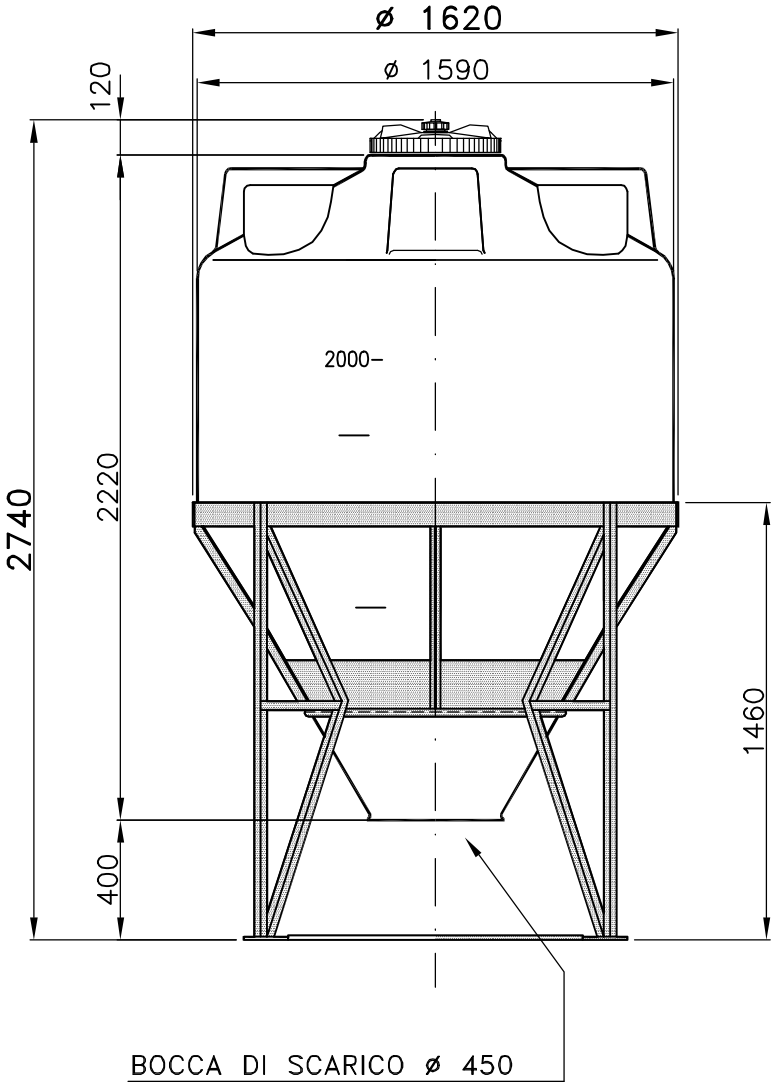

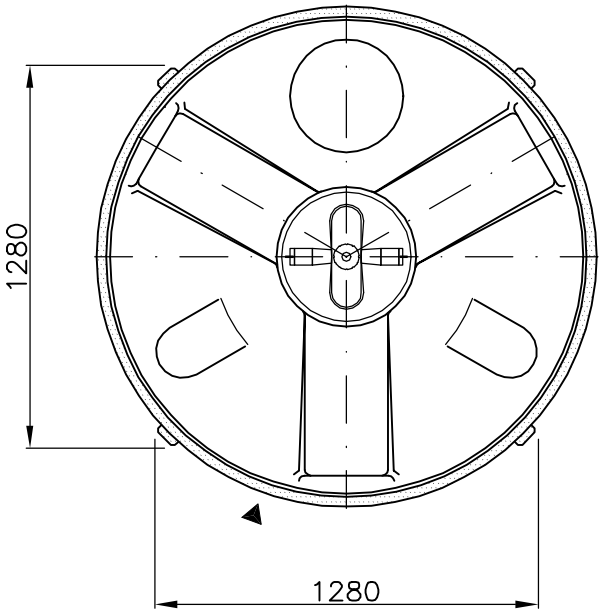

Tel. 035/844060 ASTRO Fax 035/844646