tcc\a27_4

dis. 2301/01 AS

TCC 27/4 – LT. 2700

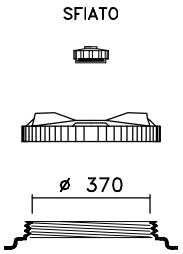

CPF 410

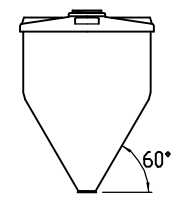

OTRE PE

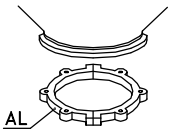

CS 4

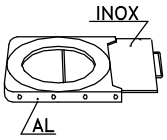

GH 4

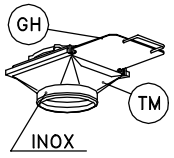

TM 4

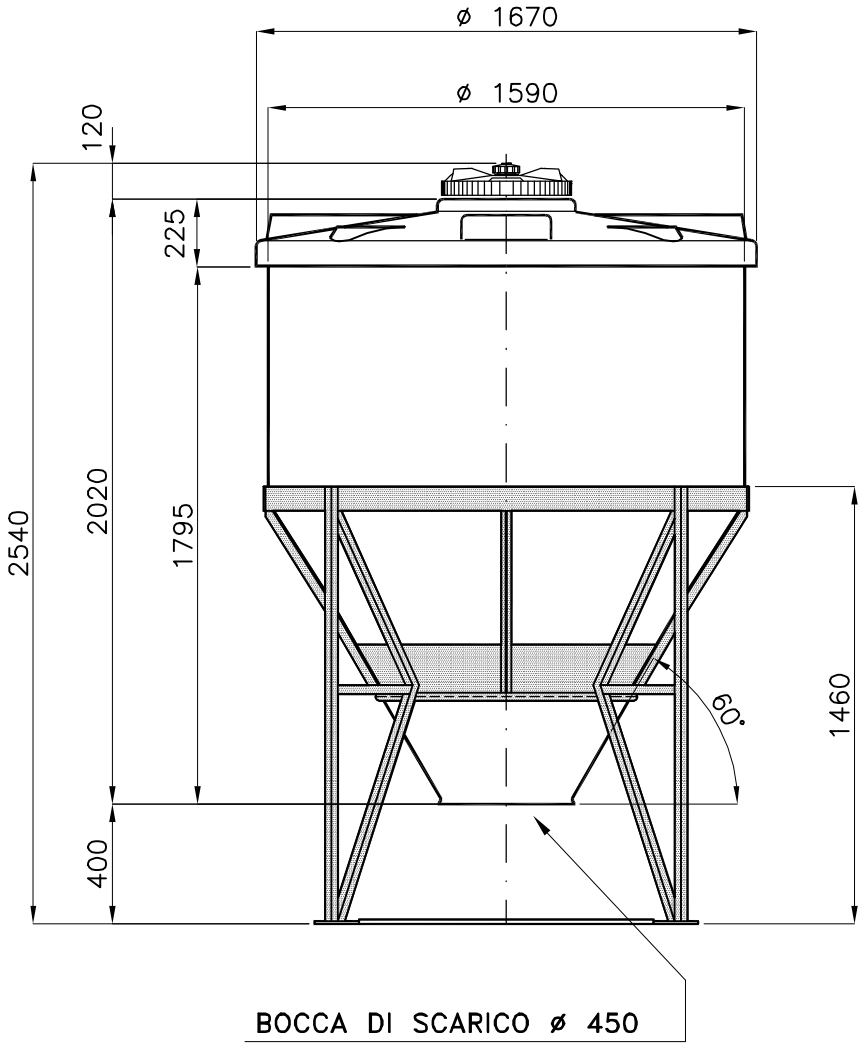

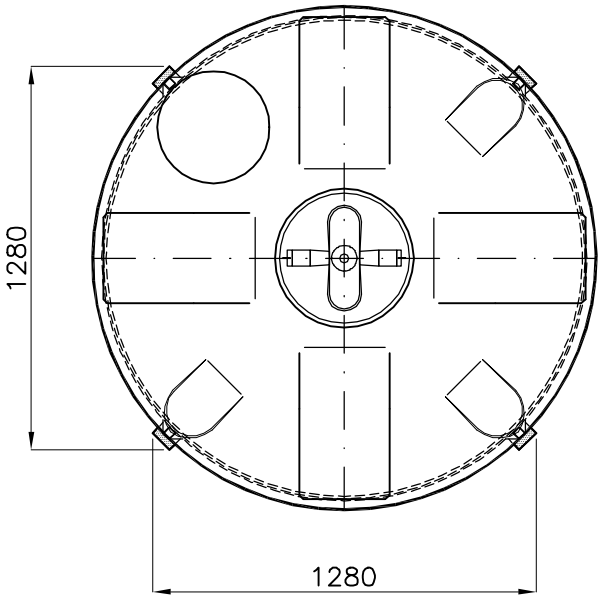

01: SL – 12.06.09 – TESTATA; SFIATO; SCALA 1:1

Tel. 035/844060 ASTRO Fax 035/844646