tcc\a15_4

dis. 2290/02 AS

TCC 15/4 – LT. 1500

SFIATO

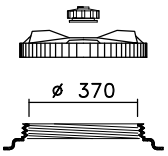

CPF 410 + SF1

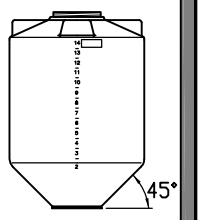

OTRE

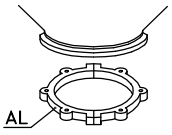

CS 4

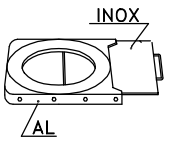

GH 4

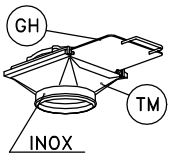

TM 4

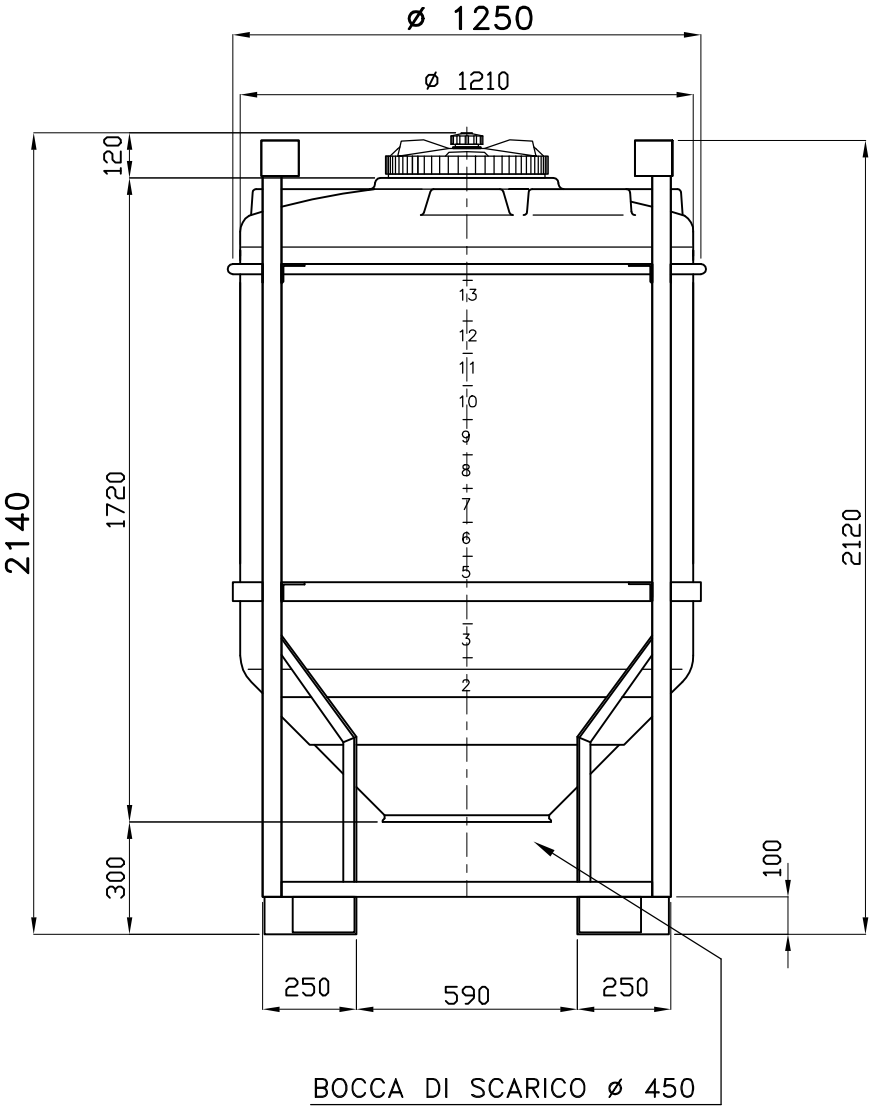

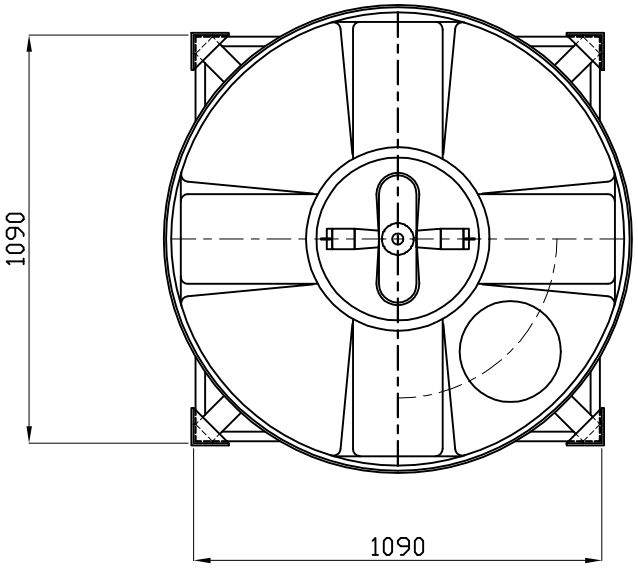

02: STEFANO_S. – 18.12.09 – MODIFICA ANELLO SUPERIORE

Tel. 035/844060 ASTRO Fax 035/844646