tcc\a13_4

dis. 2284/02 AS

TCC 13/4 – LT. 1300

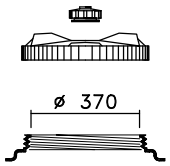

CPF ø 410

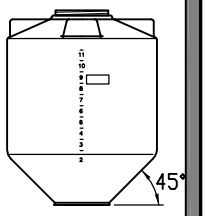

OTRE

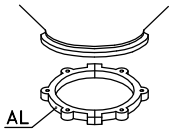

CS 4

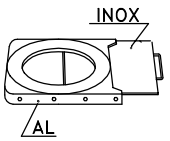

GH 4

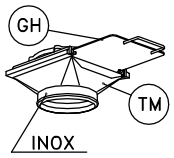

TM 4

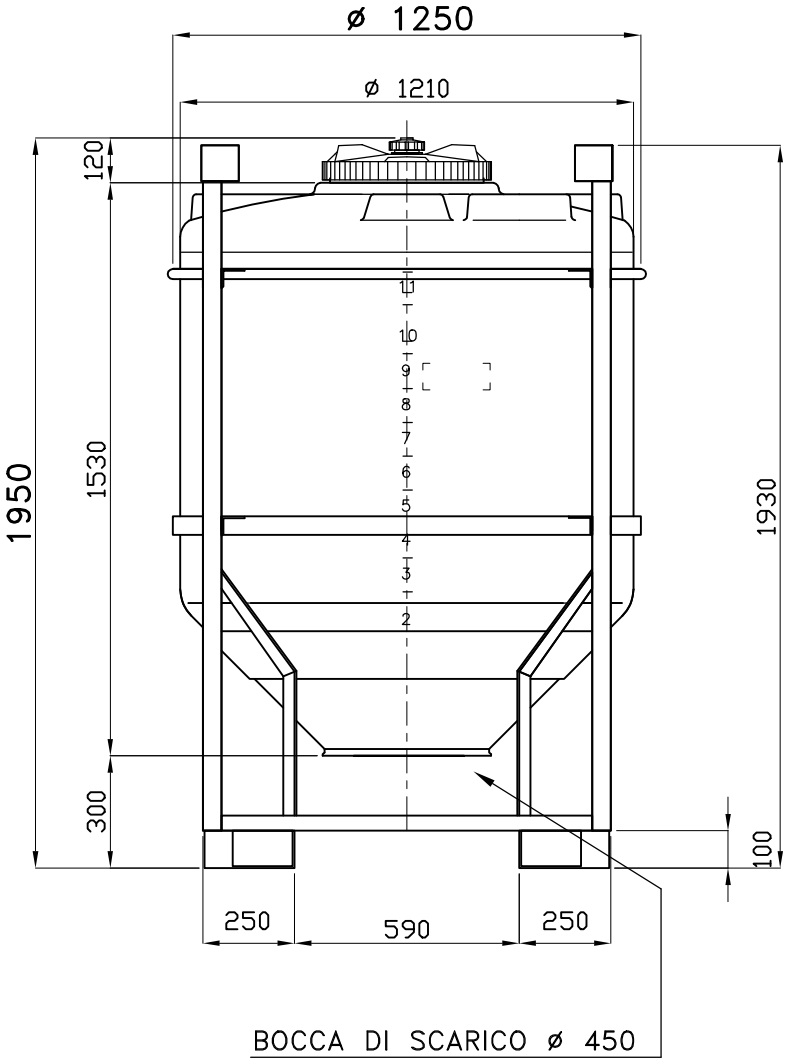

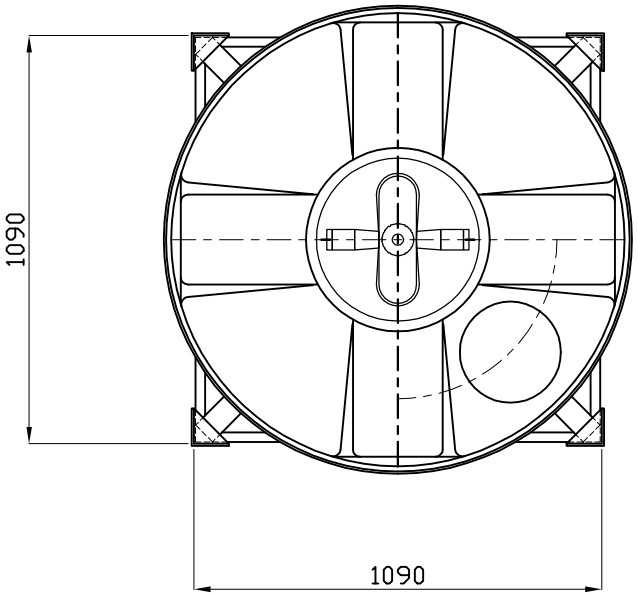

02: STEFANO S. – 18.12.09 – MODIFICA ANELLO SUPERIORE

Tel. 035/844060 ASTRO Fax 035/844646