tcc\a12_3

dis. 2280/02 AS

TCC 12/3 – LT. 1280

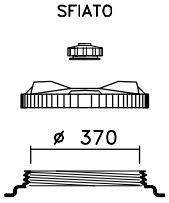

CPF 410

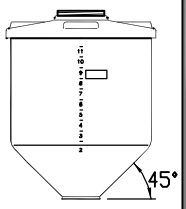

OTRE

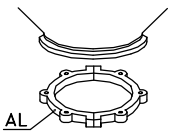

CS 3

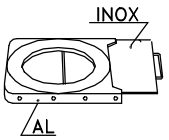

GH 3

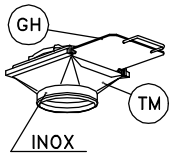

TM 3

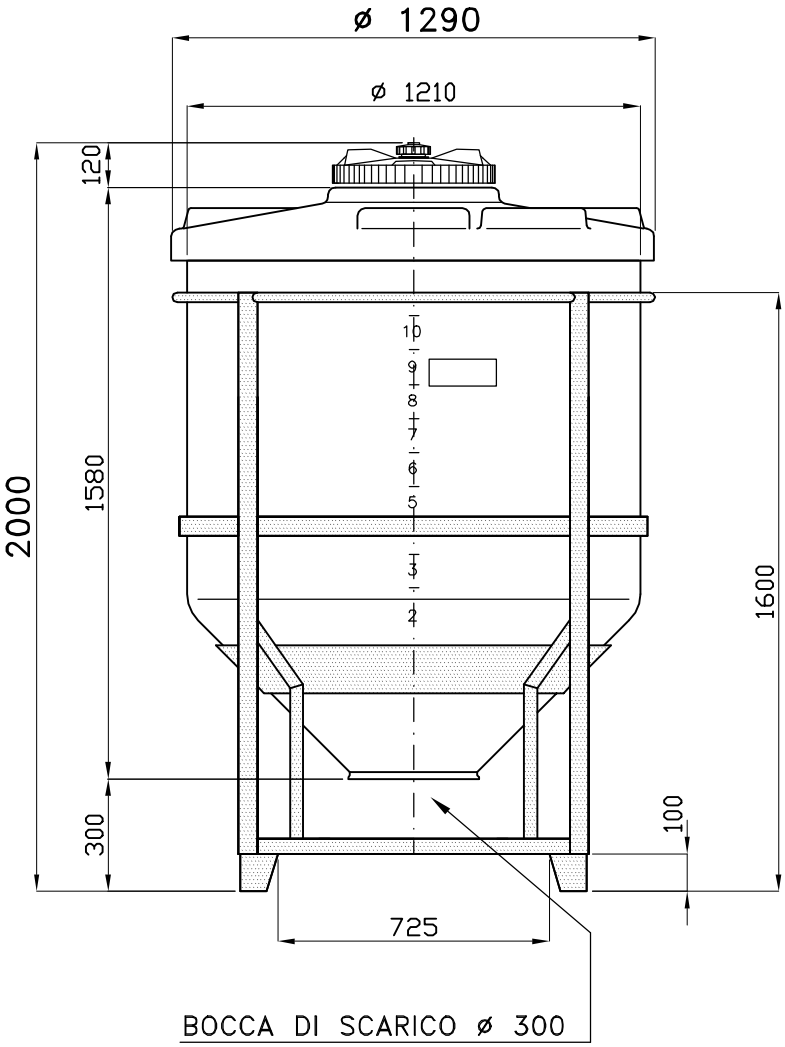

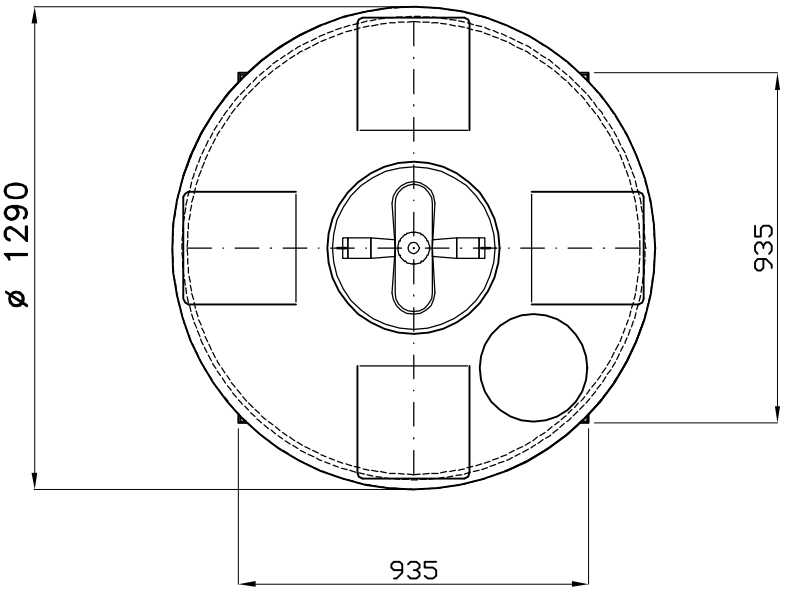

02. SL – 215.12.09 – orientamento pianetto

Tel. 035/844060 ASTRO Fax 035/844646