tca\9_2-st

dis. 2105/03 AS

TCA 9/2 – LT. 900

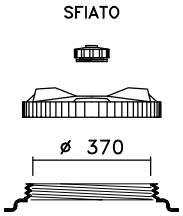

CPF ø 410
(optional)

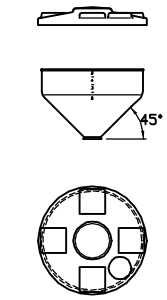

OTRE

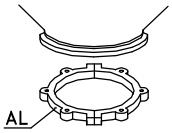

CS 2

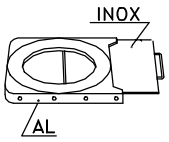

GH 2

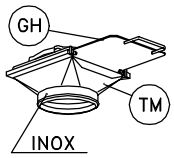

TM 2

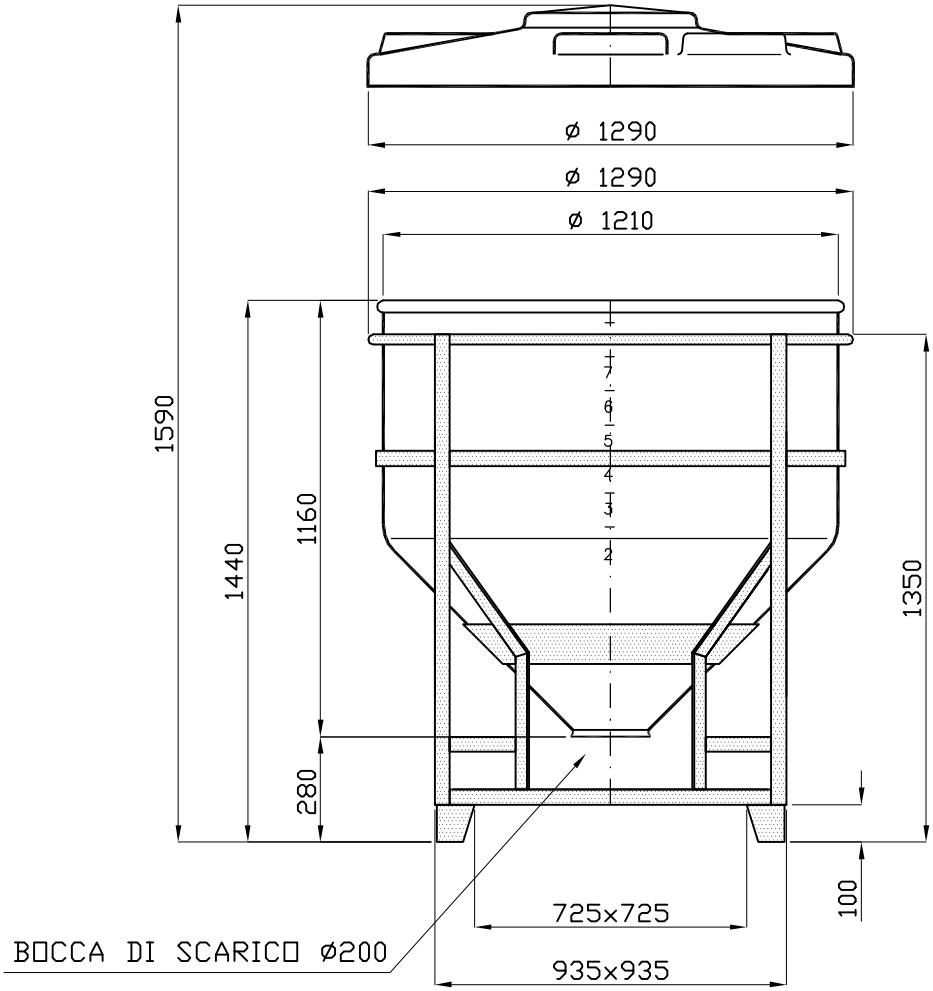

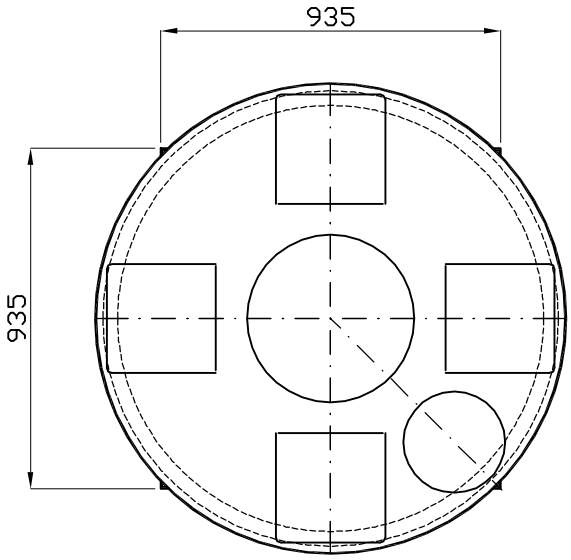

Tacche Livello

03: SL – 28.05.09 – H.TOTALE

Tel. 035/844060 ASTRO Fax 035/844646