tcc\a27_3

dis. 1887/1 AS

TCC 27/3 – LT. 2700

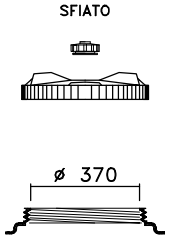

CPF 410

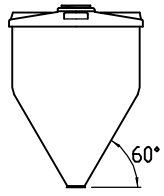

OTRE PE

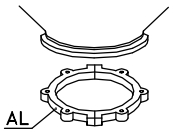

CS 3

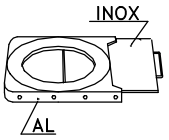

GH 3

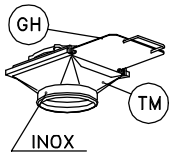

TM 3

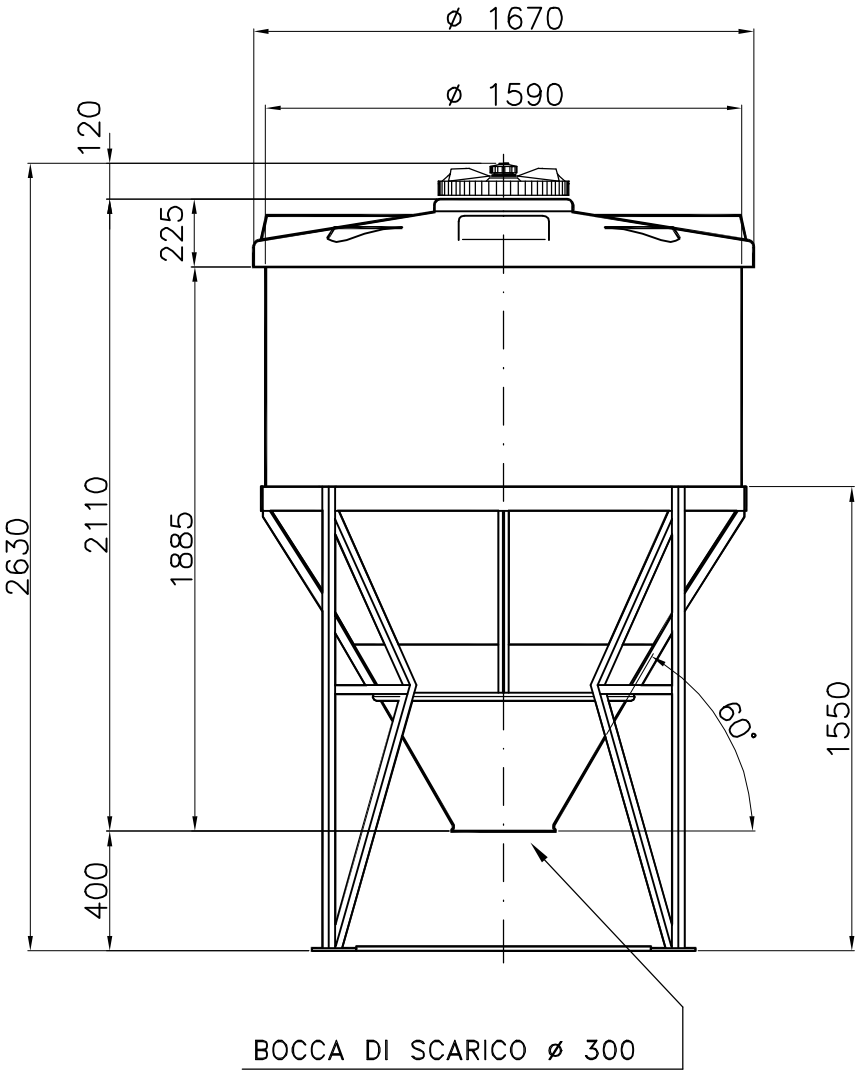

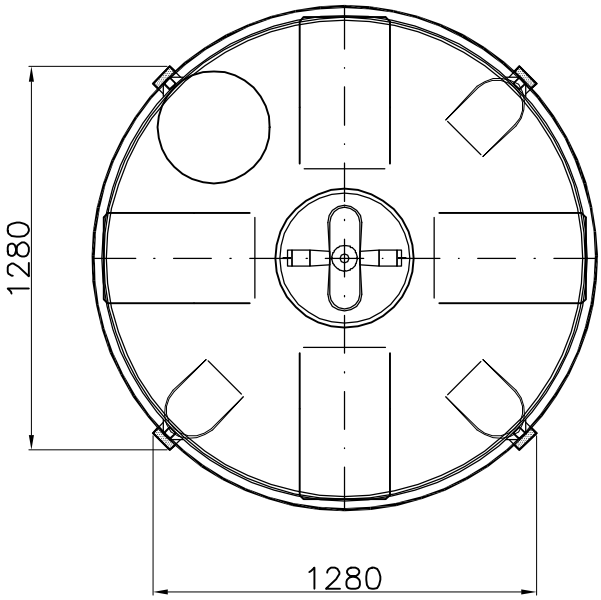

M.M.-13-04-07-testata e coperchio

Tel. 035/844060 ASTRO Fax 035/844646