tcc\a27_2

dis. 1874 AS 02

TCC 27/2 – LT. 2700

SFIATO

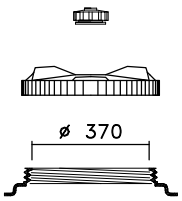

CPF 410

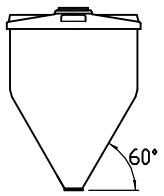

OTRE PE

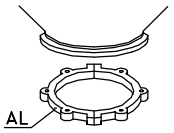

CS 2

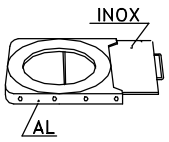

GH 2

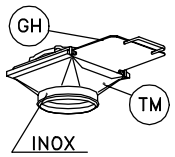

TM 2

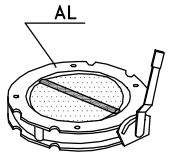

V2FS

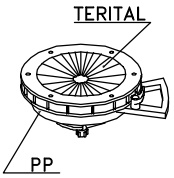

DF 2

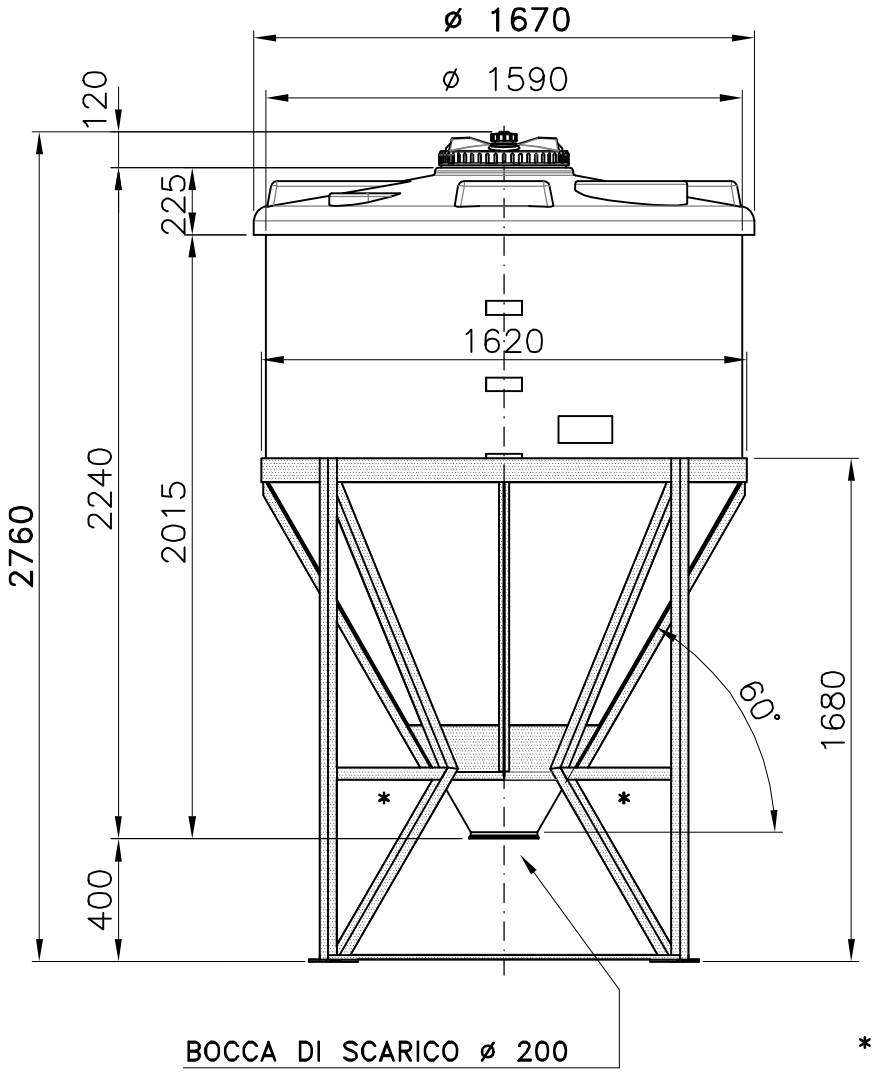

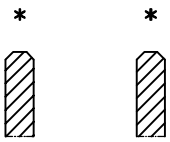

Inforcamento a vuoto

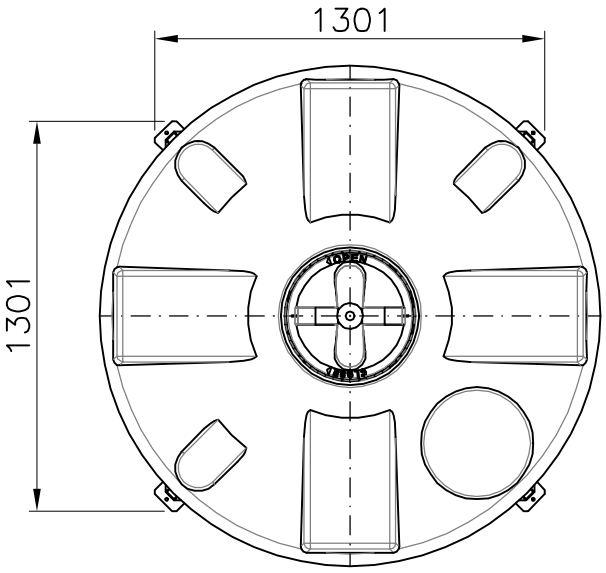

Tacche Livello

02: SL – 05.02.13 – TACCHE

Tel. 035/844060 ASTRO Fax 035/844646